DINI ARGEO
Scales - Weighing systems
A RICE LAKE WEIGHING SYSTEMS COMPANY

LTP

Hydraulic weighing system for forklift truck

OPERATING INSTRUCTIONS **ENGLISH**

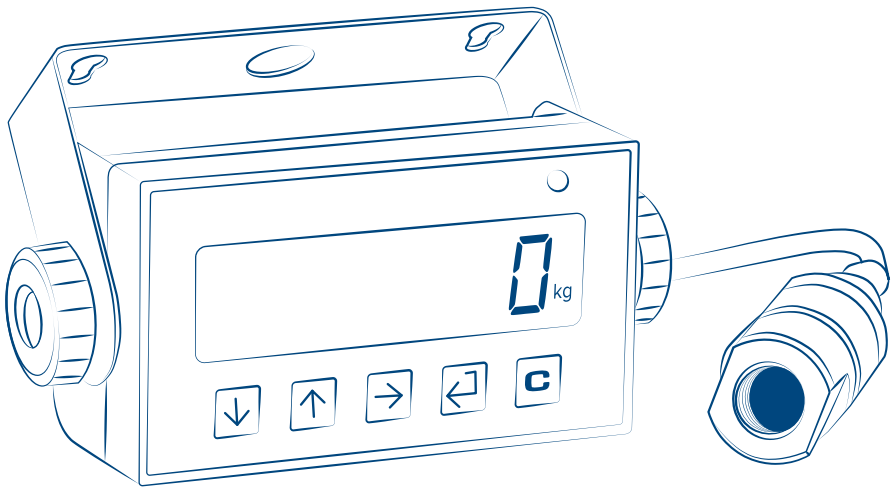

www.diniargeo.com

Contents

Introduction 4

Warnings 4

Display and keyboard 5

Accuracy factors 7

Weight reading 8

Basic functions 8

Ignition - On 8
Switching off 9
Zero 9
Adjusting the display brightness 9
Auto-weighted tare 10
Tare cancellation 10
Setting a known tare value (PT) 11
Print 12
Metric information 12

Additional functions for models with numeric keypad 13

Archive 30 tares 13
Automatic tare cancellation 14
Numeric IDs 15
Date and time 16
Printing (and reprinting of the last receipt) 17
Metric information 18

Advanced scale functions 19

How to enter the functions menu 19
Horizontal totalization 20
Exchange between net and gross weight 22
Unit of measure conversion 23

Configuration menu 25

Maintenance 30

Replacing the printer paper roll 30

DINI ARGEO Scales - Weighing systems

Optimized layout for A4 print.

Introduction

Dear customer,
Thank you for purchasing a DINI ARGEO product.

This manual explains the usage of the hydraulic weighing system for forklift trucks.
In particular, zero, tare and all the function of the weighing electronic are described, to assist the forklift driver during use.

For any additional information or specific requests, please contact your local dealer.
This publication is optimized for A4 printing.

Warnings

- The weighing system does not change the safety regulations normally applied to the forklift truck.
- Before weighing, make sure that the lift truck is stationary, on a flat surface and that there are no people in the area around the load.
- The employee training on the use of the system is the purchaser's responsibility.
- Please read this manual carefully before using the system.
- Assistance must only be carried out by personnel authorized by Dini Argeo.
- Dini Argeo is not responsible for any weighing errors resulting from improper use of the system.

Optimized layout for A4 print.

Display and keyboard

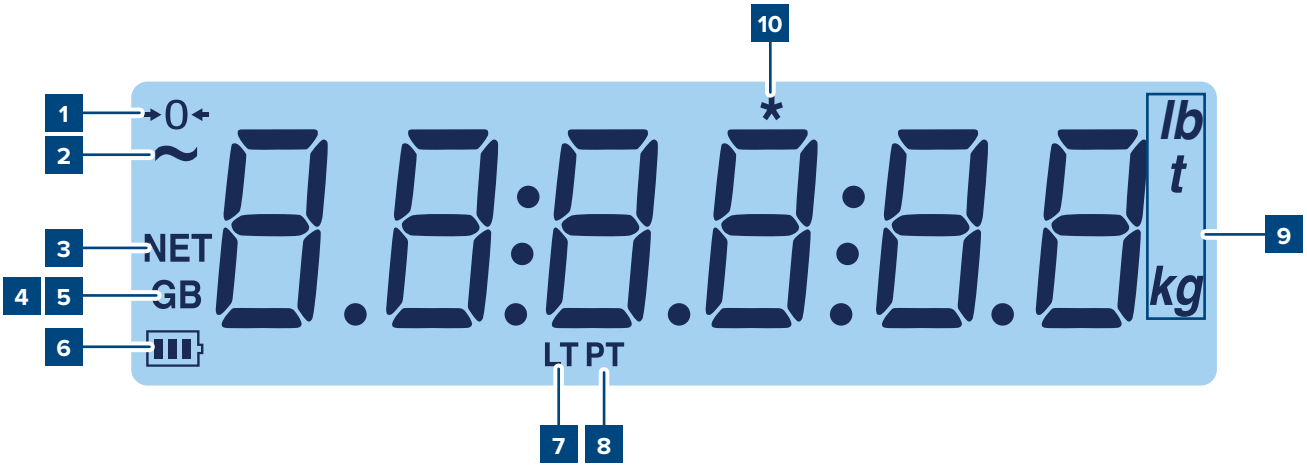

POS.	ICON	DESCRIPTION
1	→0←	Indicates that the scale is unloaded (gross zero).
2	~	Indicates that the weight is unstable.
3	NET	The net weight is displayed. **note:** there is a tare in memory.
4 / 5	G B	The gross weight is displayed.
6		Indicates the battery level:
7	LT	AND activates a locked tare.
8	PT	AND activates a manual tare.
9	*lb ... kg*	Indicates the units of measurement: pounds (lb), tonnes (t), kilograms (kg), grams (g).
10	*	Indicates when a key is pressed. In some operating modes it indicates the activation of a specific function.
11	----	Weight acquisition phase.

DINI ARGEO Scales - Weighing systems

Optimized layout for A4 print.

Button	Description
	• Resets the weight value on the scale. • If pressed for a long time (2 sec), it allows you to set the brightness of the display.
	• Performs tare on the scale. • If pressed for a long time (2 sec) it allows you to insert a preset tare.
	• Recalls the function specific to the operating mode. • If pressed for a long time (5 sec) it allows you to change the operating mode.
	• Confirm key. • Print the receipt. • If pressed for a long time (5 sec) it allows you to enter the configuration menu.
	• If pressed for 2 seconds, it turns off the instrument. • If pressed for 5 sec it shows the metrological information.
	If pressed and held (2 sec) it shows the metrological information.
	Performs the function (followed by pressing a number).
	Allows you to quickly set a numeric value.

WARNING!
For a clearer view and advanced key and mode functions, see the chapter “BASIC FUNCTIONS” and “ADVANCED FUNCTIONS”.

Optimized layout for A4 print.

Accuracy factors

The system is based on the measurement of the oil pressure contained in the hydraulic lifting circuit by means of a specific sensor. This pressure depends on the load on the forks and the height of the forks themselves, which is why the weighing operations must always be carried out at the same height *(indicated by the stickers)*.

The theoretical precision of the LTP system, correctly installed on suitable forklifts and used under optimal conditions, varies from 0.5% to 5% of the capacity (min. 20 kg).
This accuracy is adversely affected by the following factors:

	Type and state of wear of the forklift.
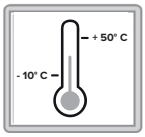	**Ambient temperature:** the temperature range of the sensor is from - 10° C to + 50° C.
	Mechanical friction: keep sliding parts clean and lubricated.
	Oil leaks.
	Load position on the forks: the gravity centre of the load must be positioned in the centre of the forks.
	Tilt of the forks: for proper weighing, position the forks at 90° to the ground.
	Lifting speed: lift the load at a constant speed and without sudden dashes so as to avoid jolts.
	Position of the sensor inside the hydraulic circuit. Refer to the technical manual for sensor installation.
	Type of oil in the hydraulic circuit: use oils with low viscosity and suitable for a wide temperature range.

Optimized layout for A4 print.

Weight reading

Before turning on the indicator, make some lifting with empty forks (at least 5) to heat the oil temperature inside the hydraulic circuit.

With the forks down (without touching the ground), turn on the weight indicator and wait for it to zero.

During load acquisition the display shows: ----
At the end of the acquisition, the weight is shown.

A

Visualization Display:

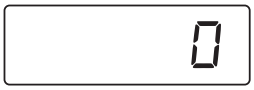

Condition of the forklift truck:

B

Visualization Display:

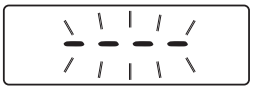

Condition of the forklift truck:

C

Visualization Display:

Condition of the forklift truck:

Between weighings it is necessary to return the weight to 0 by unloading and lowering the forks.

Basic functions

Ignition - On

A

Visualization Display:

Condition of the forklift truck:

B

C

Visualization Display:

Condition of the forklift truck:

Optimized layout for A4 print.

Switching off

A

Visualization Display:

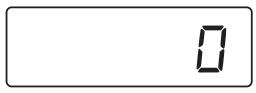

Condition of the forklift truck:

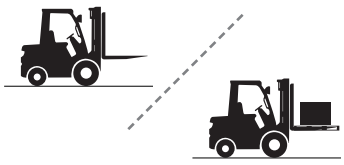

B

C

Visualization Display:

Condition of the forklift truck:

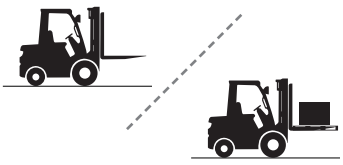

Zero

A

Visualization Display:

Condition of the forklift truck:

B

C

Visualization Display:

Condition of the forklift truck:

Adjusting the display brightness

A

Visualization Display:

Condition of the forklift truck:

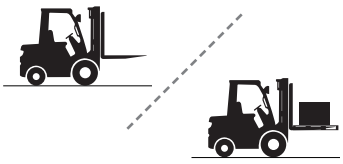

B

C

Visualization Display:

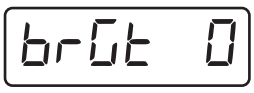

Set the brightness value:

- Increase value
- Decrease value
- Confirm

DINI ARGEO
Scales - Weighing systems

Optimized layout for A4 print.

Auto-weighted tare

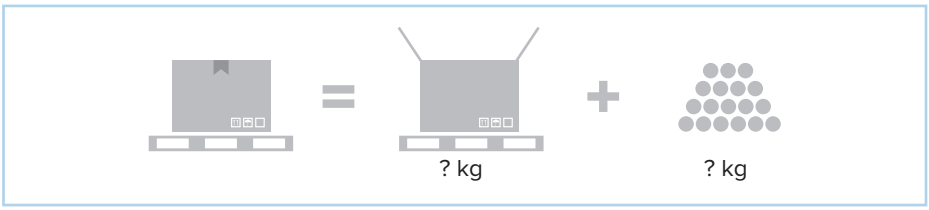

A

Visualization Display:

50

Condition of the forklift truck:

B

TARE

C

Visualization Display:

NET 0 LT

Condition of the forklift truck:

D

Visualization Display:

0

Condition of the forklift truck:

E

Visualization Display:

200

Condition of the forklift truck:

Tare cancellation

A

Visualization Display:

-50

Condition of the forklift truck:

B

TARE

C

Visualization Display:

G 0

Condition of the forklift truck:

Optimized layout for A4 print.

Setting a known tare value (PT)

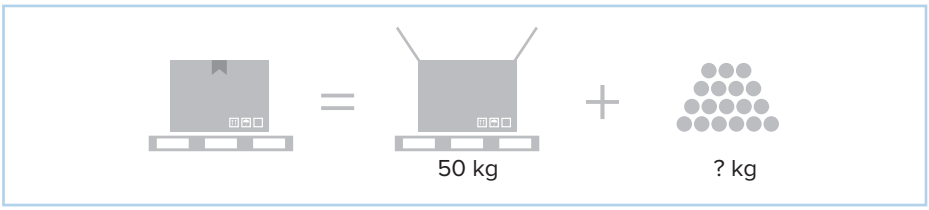

A

Visualization Display:

0

Condition of the forklift truck:

B

TARE

Press for 2 s

C

Visualization Display:

000050

Set the tare value:

Increase/ decrease the value

D

CONFIRM

E

Visualization Display:

NET -50 LT PT

Condition of the forklift truck:

F

Visualization Display:

200

Condition of the forklift truck:

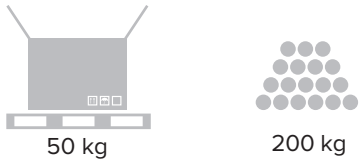

If the indicator has a numeric keypad, you can enter the tare quickly:

A

Enter the tare value:

0 ... 9

B

TARE

DINI ARGEO Scales - Weighing systems

Optimized layout for A4 print.

Print

A

Visualization Display:

200

Condition of the forklift truck:

B

PRINT

C

Visualization Display:

Pr int

Condition of the forklift truck:

Metric information

A

Visualization Display:

0

Condition of the forklift truck:

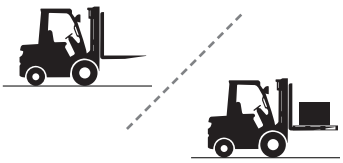

B

TARE

C Press for 4 s

C

Visualization Display:

inFo

Condition of the forklift truck:

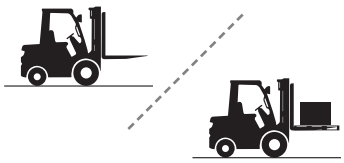

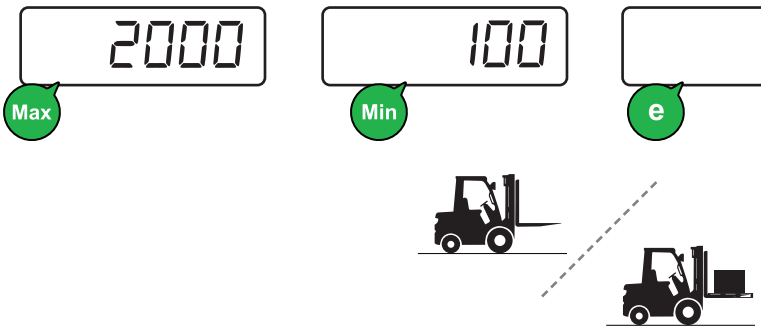

Optimized layout for A4 print.

Archive 30 tares

Allows you to store the most used tares (up to 30), to simplify the activation through quick recall.

Example

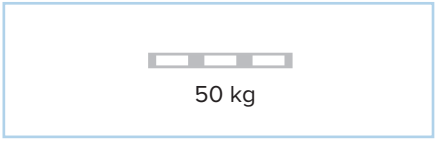

HOW TO STORE A TARE

A

Visualization Display:

Condition of the forklift truck:

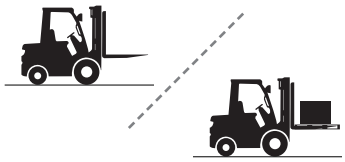

B

C

Visualization Display:

Select the memory:

↑ → ↓ Increase / Decrease value

or

0 ... 9 Enter the value

D

PRINT

E

Visualization Display:

Set the tare value:

↑ → ↓ Increase / Decrease value

or

0 ... 9 Enter the value

F

PRINT

Optimized layout for A4 print.

HOW TO RECALL A STORED TARE

A

Visualization Display:

Condition of the forklift truck:

B

Visualization Display:

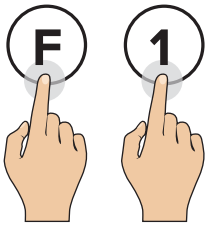

C

Visualization Display:

Select the memory:

Increase / Decrease value

or

0 ... 9 Enter the value

D

PRINT

E

Visualization Display:

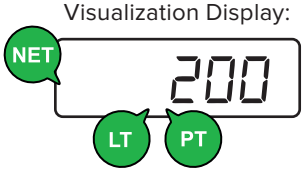

Condition of the forklift truck:

Automatic tare cancellation

A

Visualization Display:

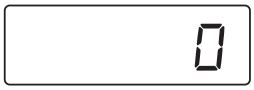

Condition of the forklift truck:

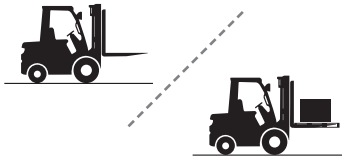

B

Visualization Display:

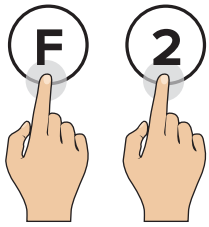

C

Visualization Display:

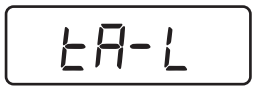

Cancellation automatically deactivated.

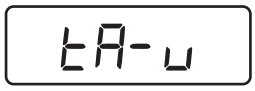

Automatic cancellation active: the tare is automatically cancelled once the forklift truck is unloaded.

Optimized layout for A4 print.

Numeric IDs

The instrument has 2 memories for the temporary recording of numerical codes that can be used to identify the product, the operator, the batch, etc.. These codes, if inserted, will be shown on the receipt at the time of printing.

HOW TO INSERT THE ID

A

Visualization Display:

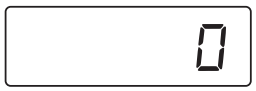

Condition of the forklift truck:

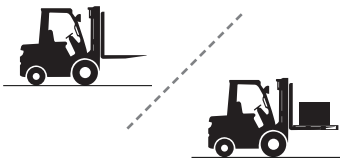

B

Visualization Display:

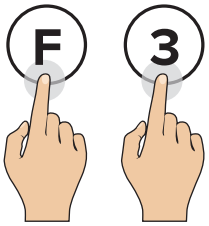

C

Visualization Display:

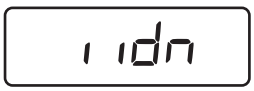

Select the memory:

(1) *or* (2) Enter the value

D

Visualization Display:

E

Visualization Display:

Enter the desired ID
(up to 10 numeric digits):

(↑)(→)(↓) Increase / Decrease value

or

(0)...(9) Enter the value

F

PRINT

Optimized layout for A4 print.

HOW TO ACTIVATE THE AUTOMATIC DELETION OF THE ID

A

Visualization Display:

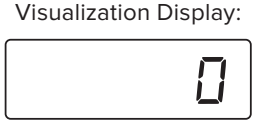

Condition of the forklift truck:

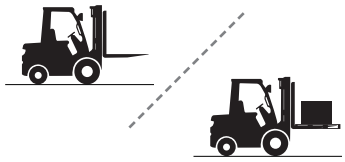

B

Visualization Display:

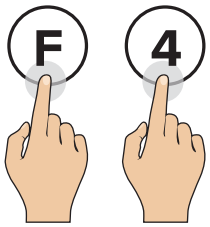

C

Visualization Display:

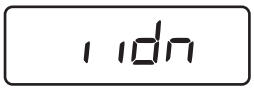

Select the memory:
(1) *or* (2) Enter the value

D

Visualization Display:

E

Visualization Display:

Cancellation
automatically deactivated.

Automatic deletion
active: the entered ID will be
deleted automatically once the
forklift truck is unloaded.

i Numeric IDs are automatically reset when the scale is turned off.

Date and time

A

Visualization Display:

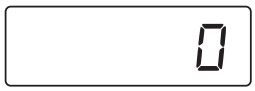

Condition of the forklift truck:

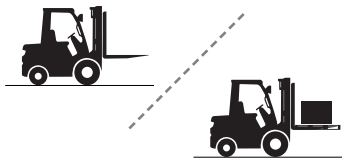

B

Visualization Display:

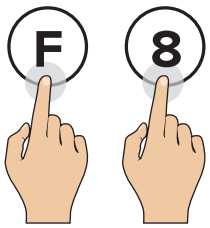

C

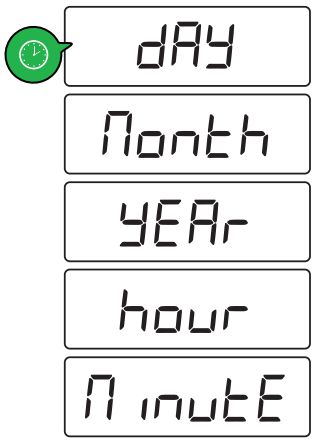

i Only if the date and time option is present.

Optimized layout for A4 print.

Printing (and reprinting of the last receipt)

PRINT

A

Visualization Display:

Condition of the forklift truck:

B

C

Visualization Display:

Condition of the forklift truck:

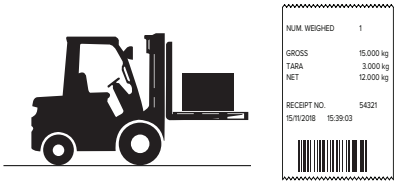

REPRINTING THE LAST RECEIPT

A

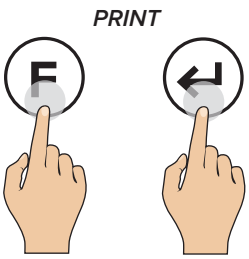

B

Visualization Display:

Condition of the forklift truck:

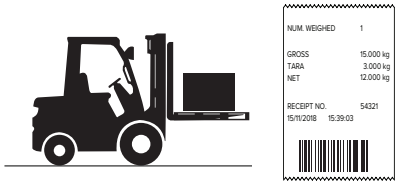

Optimized layout for A4 print.

Metric information

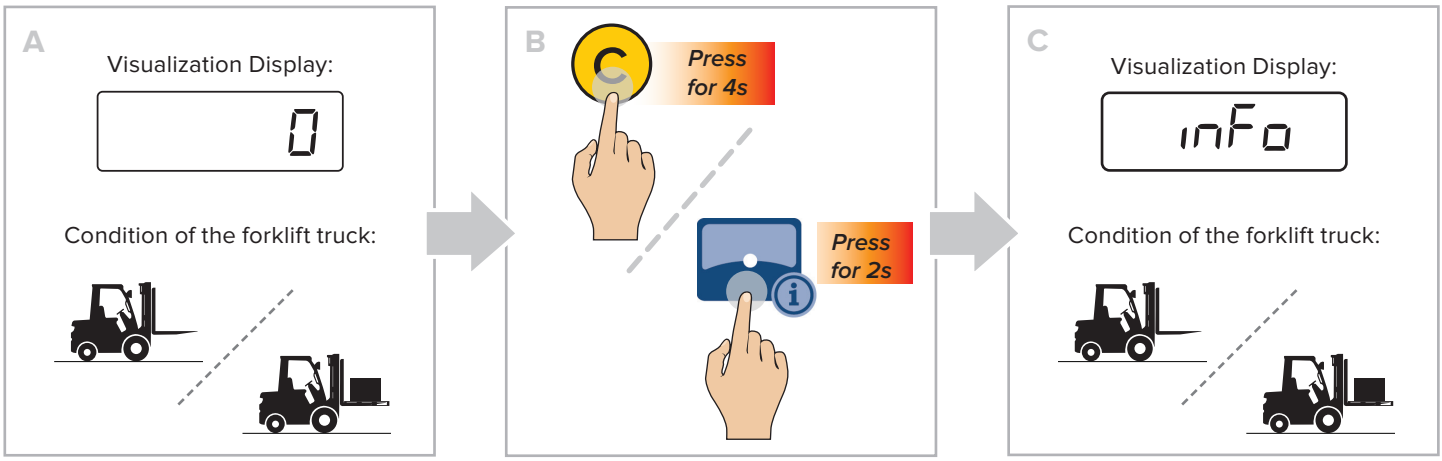

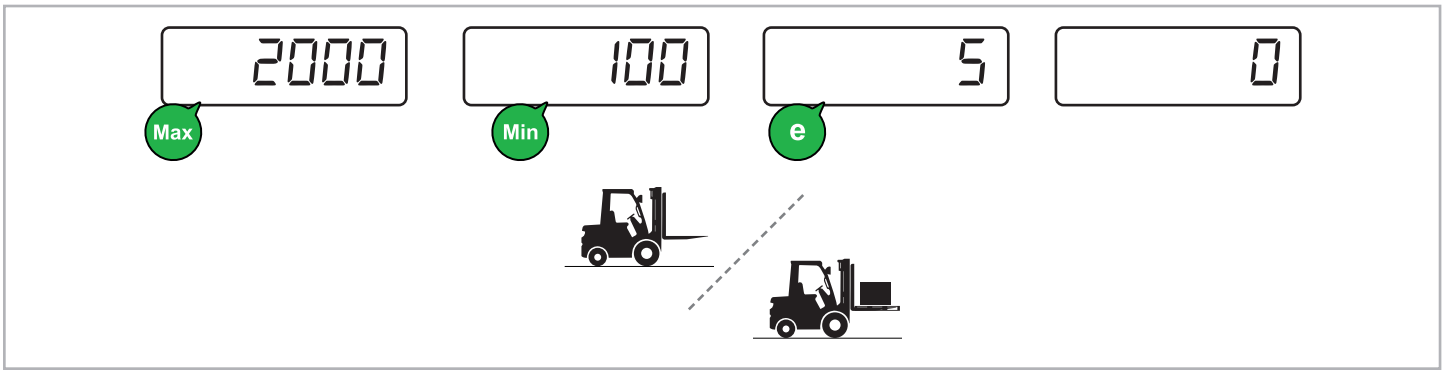

Optimized layout for A4 print.

How to enter the functions menu

A

Visualization Display:

Condition of the forklift truck:

B

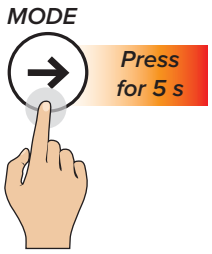

C

Visualization Display:

The indicator has entered into the configuration menu: the currently active function will appear.

D

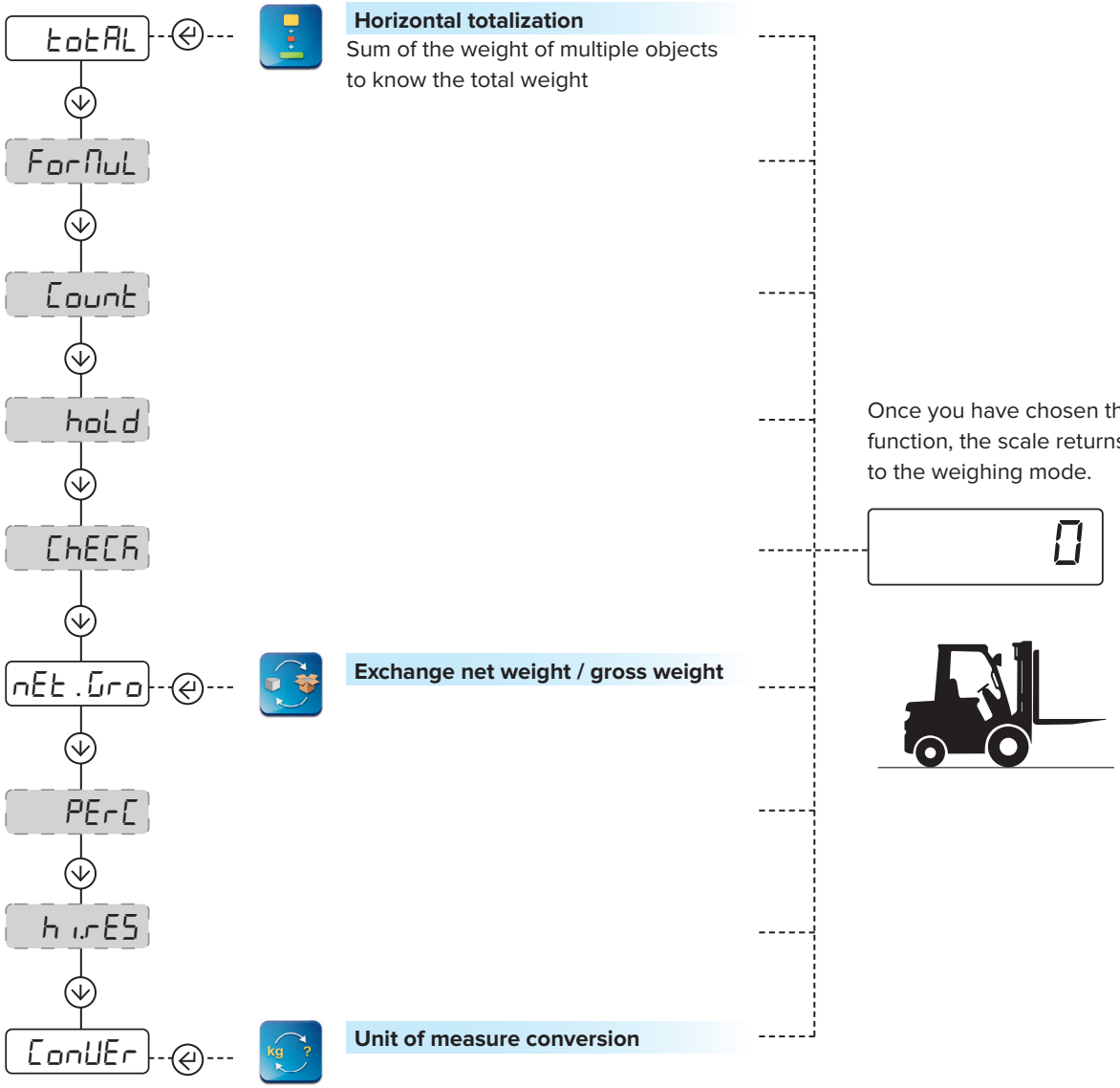

Optimized layout for A4 print.

Horizontal totalization

HOW TO ADD UP THE WEIGHINGS

A

Visualization Display:

Condition of the forklift truck:

B

PRINT

C

Visualization Display:

Condition of the forklift truck:

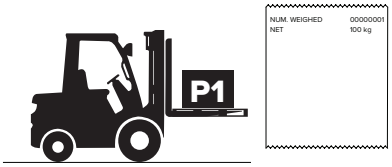

D

Visualization Display:

Condition of the forklift truck:

E

PRINT

F

Visualization Display:

Condition of the forklift truck:

G

Visualization Display:

Condition of the forklift truck:

H

PRINT

I

Visualization Display:

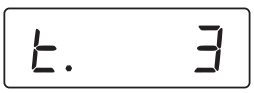

Condition of the forklift truck:

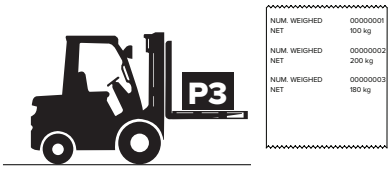

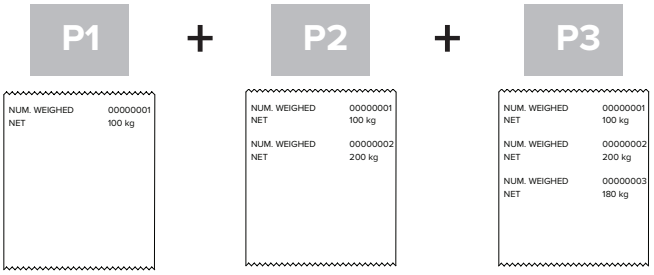

Optimized layout for A4 print.

HOW TO MOMENTARILY READ THE TOTAL

A

B

Visualization Display:

Number of weighings

Total weight

i With the numeric keypad, the (F) + (7) key combination displays the current total without printing/resetting it.

HOW TO END THE TOTALIZATION AND RESET THE TOTAL

A

B

Visualization Display:

Number of weighings

Total weight

C

NUM. WEIGHED 00000001
NET 100 kg

NUM. WEIGHED 00000002
NET 200 kg

NUM. WEIGHED 00000003
NET 180 kg

TOTAL WEIGHED 00000003
NET TOTAL 480 kg
15/11/2018 9:23:03

If this PRINTER is present

i With the numeric keypad, the (F) + (7) key combination displays the current total without printing/resetting it.

HOW TO PRINT AND RESET THE GRAND TOTAL

A

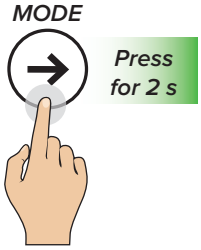

B

Visualization Display:

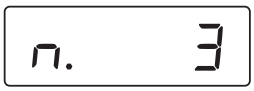

Number of weighings

Total weight

C

NUM. WEIGHED 00000001
NET 100 kg

NUM. WEIGHED 00000002
NET 200 kg

NUM. WEIGHED 00000003
NET 180 kg

TOTAL WEIGHED 00000003
NET TOTAL 480 kg
15/11/2018 9:23:03

If this PRINTER is present

i With the numeric keypad, the (F) + (6) key combination displays the current total without printing/resetting it.

Optimized layout for A4 print.

Exchange between net and gross weight

A

Visualization Display:

50 kg

Condition of the forklift truck:

B

TARE

C

Visualization Display:

NET 0 LT

Condition of the forklift truck:

D

Visualization Display:

0

Condition of the forklift truck:

E

Visualization Display:

200

Condition of the forklift truck:

F

Visualization Display:

NET 200

Condition of the forklift truck:

G

MODE

H

Visualization Display:

G 250

Condition of the forklift truck:

i By pressing MODE at any time, you can change from net to gross weight.

Optimized layout for A4 print.

Unit of measure conversion

HOW TO CONVERT THE UNIT OF MEASUREMENT TO POUNDS (STANDARD MODE)

A

Visualization Display:

200 kg

Condition of the forklift truck:

B

MODE

C

Visualization Display:

440.9 lb

Condition of the forklift truck:

i By pressing MODE at any time you can switch from weight in kg to weight in pounds.

HOW TO CONVERT THE UNIT OF MEASURE WITH FREE CONVERSION FACTOR

A

Visualization Display:

200

B

MODE

Press for 2 s

C

Visualization Display:

FACtor

D

Visualization Display:

00000.0

Enter the conversion factor:

↑ ↓ → Increase/decrease the value

or

0 … 9 Enter the value

Examples:

Pounds (lb)	1 g = 0.00220
Ounces (oz)	1 g = 0.03527
Stone (st)	1 g = 0.00016
Carats (kt)	1 g = 5.00000
Grains (gr)	1 g = 15.43240

Any conversion factor is multiplied by weight.

E

PRINT

proceed →

DINI ARGEO Scales - Weighing systems

Optimized layout for A4 print.

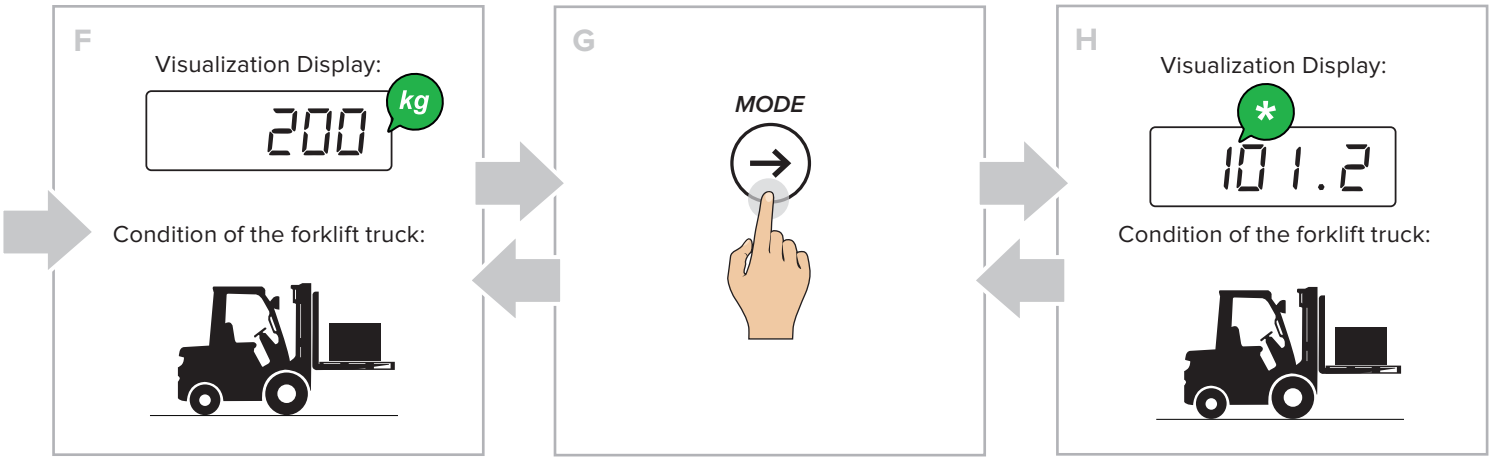

By pressing MODE at any time, the unit of measurement can be converted with a free conversion factor.

Optimized layout for A4 print.

MENU

How to enter

1. 5 Sec.

How to browse

= ↑
= ↓
= ↵
= C

- A CLOCK
  - 1 dAY
  - 2 Month
  - 3 YEAr
  - 4 hour
  - 5 MinutE
- B FILtEr
- C diU.2nd
- D diU.unF
- E t In.uP
- F t In.AUG
- G AUG.dt
- H In.StAb
- I C.Corr
- J PrEC.10
- K SCrEEn
- L tArE
- J AutoFF
- K on.Pr in
- L t In.rES
- M rESEt
- N diAG

CLOCK - DATE AND TIME

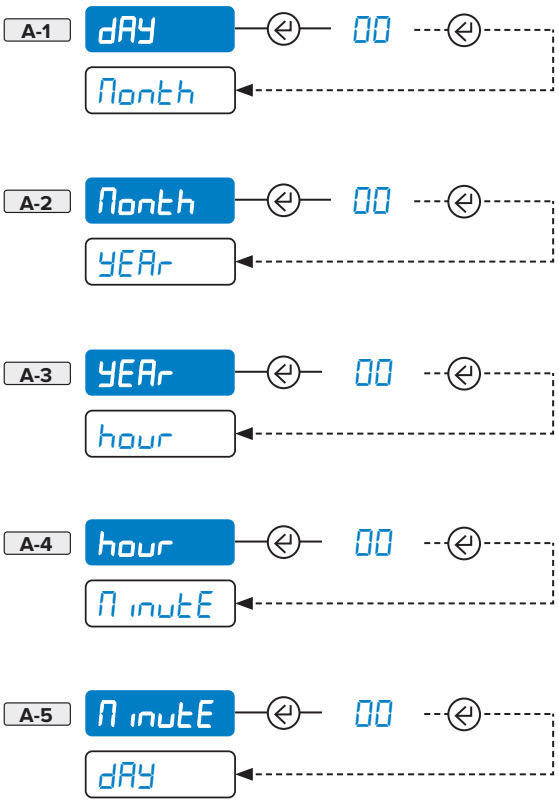

FILtEr - WEIGHING FILTERS

Use the StAnd.0 filter.

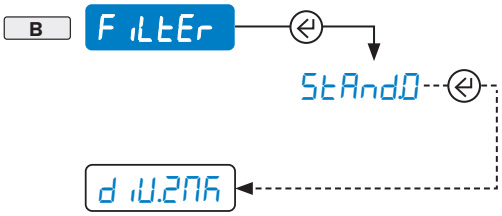

DINI ARGEO Scales - Weighing systems

Optimized layout for A4 print.

MENU

How to enter

1. 5 Sec.

How to browse

= ↑
= ↓
= ↵
= C

A CLocK
B F iLtEr
C d iU.2nK
D d iU.unF
E t iN.uP
F t iN.AUG
G AUG.dt
H N.StAb
I C.Corr
J PrEC.10
K SCrEEn
L tArE
J AutoFF
K on.Pr in
L t iM.rES
M rESEt
N d iAG

SENSOR adjustment

Advanced configuration parameters. For manufacturer's use only.

C d iU.2nK

D d iU.unF

E t iN.uP

F t iN.AUG

G AUG.dt

H N.StAb

I C.Corr

Refer to the technical manual for more information.

PrEC.10 - HIGH RESOLUTION READING DIVISION

This functions allows you to display the weight with ten times greater resolution

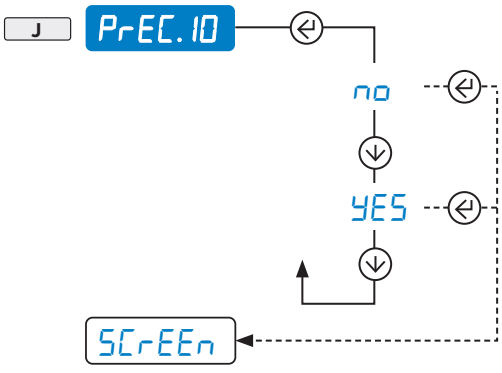

MENU

How to enter	How to browse
1. 5 Sec.	↑ = ↑
	↓ = ↓
	→ = ↵
	← = C

A CLock
B FiLtEr
C diU.2MR
D diU.unF
E tiM.uP
F tiM.AUG
G AUG.dt
H M.StAb
I C.Corr
J PrEC.10
K SCrEEn
L tArE
J AutoFF
K on.Pr in
L tiR.rES
M rESEt
N diAG

1 bAR.L it
2 br iGht
3 LoCR

SCrEEn - ADJUSTING THE DISPLAY

Backlighting

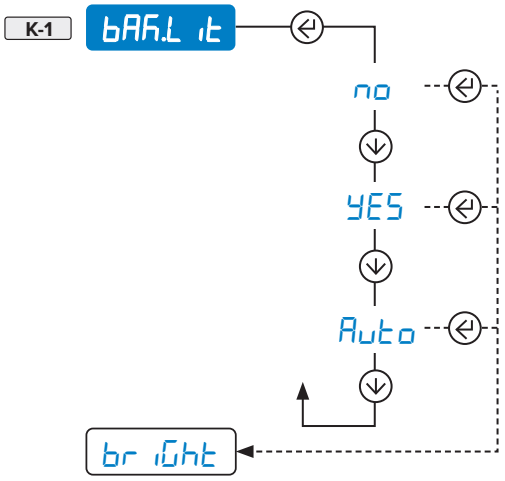

Always on

On when weight is unstable

Brightness

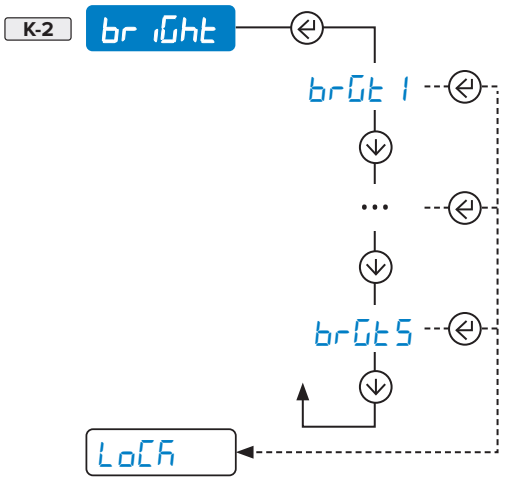

Display lock (for use by the manufacturer)

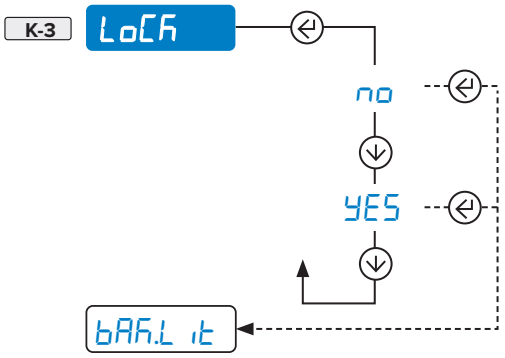

DINI ARGEO
Scales - Weighing systems

Optimized layout for A4 print.

MENU

How to enter

1. 5 Sec.

How to browse

= ↑
= ↓
= ↵
= C

A CLocK
B F iLtEr
C d iU.2nR
D d iU.unF
E t iN.uP
F t iN.AUG
G AUG.dt
H n.StAb
I C.Corr
J PrEC.10
K SCrEEn
L tArE
J AutoFF
K on.Pr in
L t iN.rES
M rESEt
N d iAG

tArE - TARE

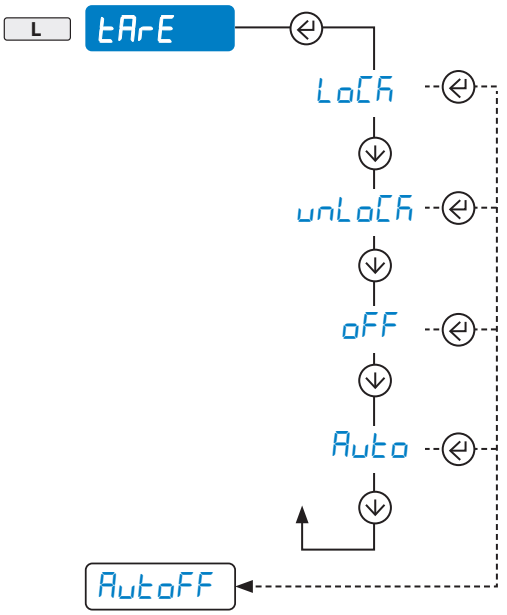

AutoFF - AUTOMATIC SWITCHING OFF

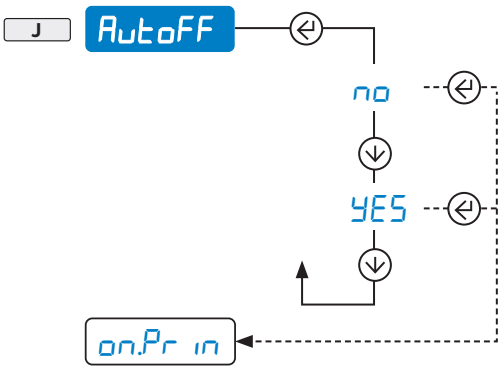

on.Pr in - MANUAL PRINTER SWITCHING ON

Visible only if there is an integrated printer.

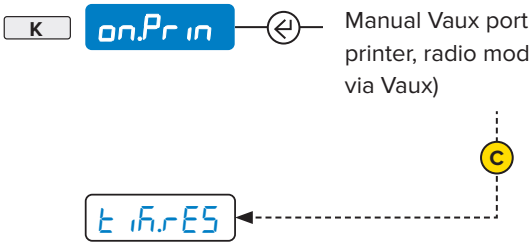

MENU

How to enter

1. 5 Sec.

How to browse

= ↑
= ↓
= ↵
= C

A CLocK
B F iLtEr
C d iU.2nA
D d iU.unF
E t iN.uP
F t iN.AUG
G AUG.dt
H n.StAb
I C.Corr
J PrEC.10
K SCrEEn
L tArE
J AutoFF
K on.Pr in
L t iK.rES
M rESEt
N d iAG

t iK.rES - TICKET NUMBER RESET

L t iK.rES ↵ SurE? ↵
rESEt

rESEt - FACTORY CONFIGURATION RESET

M rESEt ↵ SurE? ↵
d iAG

d iAG - DIAGNOSTICS

N d iAG ↵ Reserved for technical staff.

DINI ARGEO Scales - Weighing systems
Optimized layout for A4 print.

The results of the weighing system depend on the condition of the various parts of the lift truck.
The weighing system does not require any special maintenance, but a poor condition of the various parts of the forklift truck can negatively affect the accuracy.

For this reason, it is advisable to:
- Lubricate the chains and the mast in such a way as to reduce friction between the two components as much as possible.
- Regularly clean the lift truck so that it operates under almost constant conditions.
- Observe the IP protection rating of the instrument when cleaning the system.

Note: *It is advisable to recalibrate the weight indicator every 3 months.*

Replacing the printer paper roll

To replace the roll of the integrated thermal printer (if applicable), proceed as follows:

1. Open the door by pressing the central button.

2. Insert the roll with the thermal surface facing outwards.

3. Close the door by pressing on both sides.

4. Remove excess paper.

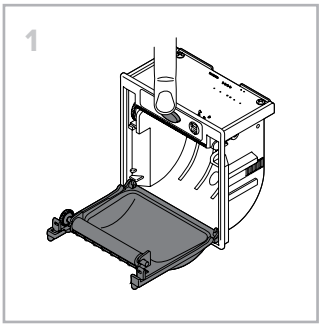

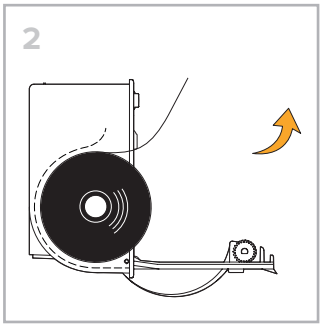

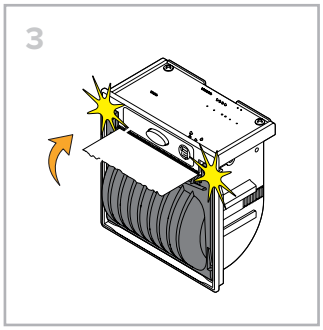

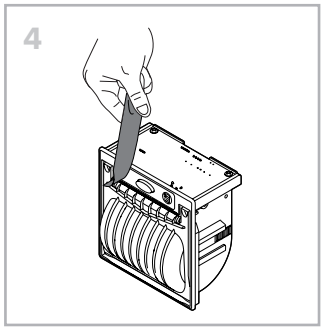

Optimized layout for A4 print.

DINI ARGEO
Scales - Weighing systems
A RICE LAKE WEIGHING SYSTEMS COMPANY

HEAD OFFICE
Via Della Fisica, 20
41042 Spezzano di Fiorano, Modena - Italy
Tel. +39 0536 843418 - Fax +39 0536 843521

SERVICE ASSISTANCE
Via Dell'Elettronica, 15
41042 Spezzano di Fiorano, Modena - Italy
Tel. +39 0536 921784 - Fax +39 0536 926654

www.diniargeo.com

Authorized service center stamp

The information in this document is approximate and can be subject to variations without prior notice by Dini Argeo, in compliance with the norms in force.
The official technical data are available in the updated version on the following website www.diniargeo.com or by contacting Dini Argeo Customer Service.

USER_MAN_ENG_LTP
Rev. 15.04.2020